FRONT LOADING

Meridian

WASHER

Model 824

OWNER'S MANUAL

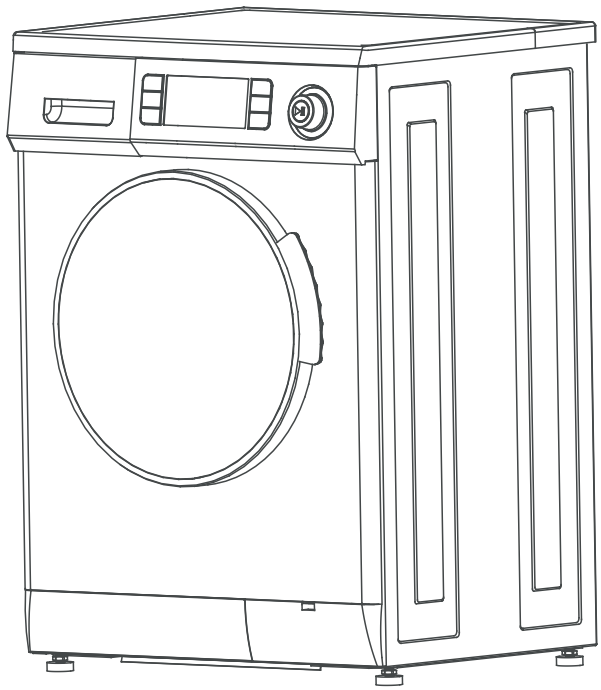

TABLE OF CONTENTS

Warranty ……...1

Technical Data …….....2

Introduction …….3

Important Safety Instructions ……4

Safety .....……5

Diagram of the Washer…….....6

Installation Instructions …….....7

Electrical .....……...9

Plumbing .....…….…10

Program Selection Chart…….…11

Operating Instructions ...……...12

Understanding Fabric Care Labels …….....14

Winterizing your Washer ...…….…….…15

Maintenance .....…….……. 15

Stain Removal Chart …….…… 17

Troubleshooting …….…… 20

Please read the Owner's Manual carefully before using your new Fully Automatic Washer

WARRANTY INFORMATION

Your appliance is protected by this warranty under normal, personal, family or household use (1 Year), and limited commercial use (90 days), in the USA and Canada.

WARRANTY

Meridian Appliances undertakes to the consumer-owner to repair or, at our option, to replace to replace any part of this product which proves to be defective in workmanship or material under normal personal, family or household use, in the USA and Canada, for a period of one year from the date of original purchase. For commercial use, the product is warranted for a period of 90 days. During this period, we will provide all labor and parts necessary to correct such defect, free of charge, if the appliance has been installed and operated in accordance with the written instructions with the appliance. Ready access to the appliance, for service, is is the responsibility of the consumer-owner.

EXCLUSIONS

In no event shall Meridian Appliances be liable for incidental or consequential damages or for damages resulting from external causes such as abuse, misuse, incorrect voltage or acts of God. This warranty does not cover service calls which do not involve defective workmanship or materials covered by this warranty. Accordingly, diagnosis and repair costs for a service call which does not involve defective workmanship or materials will be the responsibility of the consumer-owner.

Specifically, the following work is not covered under warranty and does not constitute warranty work:

Installation – e.g. improper hook-up or leveling or non-removal of shipping rods
Maintenance – e.g. cleaning of air and/or water filter
Damage – e.g. replacing broken door handle

Most work is covered. The defining factor is, has the machine malfunctioned (Meridian Appliances is responsible) or has the customer omitted or done something to cause machine to malfunction (customer is responsible). Some States do not allow the exclusion or limitation of incidental or consequential damages, so the above limitation or exclusion may not apply to you.

WARRANTY SERVICE

This warranty is given by:

Meridian Appliances
10216 Georgibelle Drive, Suite 900D
Houston, TX 77043-5249

For Service:

Call 1-800-776-3538
Email: service@appliancedesk.com
Web: www.ApplianceDesk.com
Business hours (9:00 a.m. to 5:00 p.m. weekdays).

GENERAL

Since it is responsibility of the consumer-owner to establish the warranty period by verifying the original purchase date, the Meridian Appliances recommends that a receipt, delivery slip or some other appropriate payment record be kept for that purpose. Remember to send to send in your Warranty Registration Card so that a proof of your purchase exists with the Meridian Appliances. You can also register online by typing the following link **www.ApplianceDesk.com**. This warranty gives you specific legal rights, and you may also have other rights which vary from State to State.

All rights reserved. Manual subject to change without notice.

Intertek

4007606

Electrical Testing Laboratories

US **N°** 4007606 **CANADA**

The ETL Listed Mark is the legal equivalent to the UL and CSA Listed Marks

TECHNICAL DATA

Model	MD 824
Rated Voltage	110-120V/60Hz 5A
Washing input power	240 W
Spin input power	450 W
Capacity	13 lbs.
Spin Speed	1200 rpm
Programs	14
Water pressure	0.05-1(Mpa)
Dimensions (HxWxD)	33.5 x 23.6 x 22 (inches)
Net Weight	152 lbs.

INTRODUCTION

Congratulations on your new Washer. In addition to its contemporary design, this is a highly sophisticated engineered product that will give you many years of satisfaction.

Here are some of the best reasons for buying your Washer

1. Easy Operation

This appliance is simple to use as a washer.

2. Improved Operation

With a high spin speed of 1200 rpm, more water is extracted, allowing improved dry times.

3. Convenience

This appliance can be permanently installed and be made portable with the installation of the portability kit (sold separately) where needed.

4. Placement Options

The Washer's sleek design makes it a perfect appliance for any kitchen or laundry room. Its compact size makes the Washer perfect for placement on each floor of your home.

5. Better Clothing Appearance

This Washer has no agitator to damage your clothes so they look better and last longer.

6. Water Savings

This appliance uses very little water for washing and far less than a standard full size top-loading washer. A new feature introduced is automatic water level which helps in saving water as it automatically decides the water intake depending on the quantity of your clothes.

7. Energy Savings

This appliance is engineered to provide valuable energy savings when compared to other washers

8. Maintenance

Since the machine has a self-cleaning pump, this appliance needs no cleaning of lint after drying. Instead, there is a convenient coin trap.

9. Space Savings

The washer is of optimum size thus saving previous space around your home.

10. Add a sock

In this feature, the program can be stopped at any time to add forgotten items to the wash. Press PAUSE for 5 seconds. Door will open after draining water so that it does not overflow. Load clothes. Close door. Press the START button. Washer will continue from the point it stopped.

IMPORTANT SAFETY INSTRUCTIONS

Your safety and that of your children

Your washing machine has been built in compliance with safety regulations, to protect you and all your family.

WARNING – To reduce the risk of fire, electric shock, or injury to persons when using your appliance, follow basic precautions, including the following:

1. Read all instructions before using the appliance.
2. Do not wash or dry articles that have been previously cleaned in, washed in, or spotted with gasoline, dry-cleaning solvents, other flammable or explosive substances, as they emit vapors that could ignite or explode.
3. Do not allow children to play on or in the appliance. Close supervision of children is necessary when the appliance is used near children.
4. Before the appliance is removed from service or discarded, remove the door.
5. Do not reach into the appliance if the tub or drum is moving.
6. Do not install or store this appliance where it will be exposed to the weather.
7. Do not tamper with controls.
8. Do not repair or replace any part of the appliance or attempt any servicing unless specifically recommended in the user-maintenance instructions or in published user-repair instructions that you understand and have skills to carry out.
9. Do not add gasoline, dry-cleaning solvents, or other flammable or explosive substances to the wash water. These substances give off vapors that could ignite or explode.
10. Under certain conditions, hydrogen gas may be produced in a hot water system that has not been used for 2 weeks or more. **HYDROGEN GAS IS EXPLOSIVE.** If the hot water system has not been used for such a period, before using a washing machine or combination washer-dryer, turn on all hot water faucets and let the water flow from each for several minutes. This will release any accumulated Hydrogen.
11. Do not use fabric softeners or products to reduce static unless recommended by the manufacturers of the fabric softener product.
12. Do not use heat to dry articles containing foam rubber or similarly textured rubber-like materials.
13. Check the Coin Trap every few months to remove any coins, buttons or similar size objects.
14. For vented washer-dryers keep the exhaust opening and surrounding areas free from accumulation of lint, dust, and dirt.
15. Do not place items exposed to cooking oils in your dryer. Item contaminated with cooking oils may contribute to a chemical reaction that could cause a load to catch fire.

SAVE THESE INSTRUCTIONS

SAFETY

CAUTION

RISK OF ELECTRIC SHOCK DO NOT OPEN

CAUTION: TO REDUCE THE RISK OF ELECTRIC SHOCK, DO NOT REMOVE COVER (OR BACK). NO USER SERVICABLE PARTS INSIDE. REFER SERVICING TO QUALIFIED SERVICE PROFESSIONALS.

The model number and the serial number are on the label affixed to the back of the unit. These numbers are also available on the front of the cabinet behind the door.

You should note the model and serial numbers of this unit in the space provided. Retain this booklet as a permanent record of your purchase to aid in identification in the event of theft.

MODEL#_____

SERIAL#_____

HELPFUL HINTS FOR WASHER EFFICIENCY

1. FABRIC SOFTENER: After the wash cycle, the clothes can get stuck to the sides of the drum. USING LIQUID FABRICSOFTENER WILL CAUSE THE CLOTHES TO UNSTICK IMMEDIATELY AND TUMBLE IN THE DRYCYCLE. THIS HELPS DRY CLOTHES FASTER AND CAUSES LESS WRINKLES.

2. OVERLOADING: The drum has a capacity of 13 lbs (1.57 cu. ft.) While this unit has one of the largest drum available on any combination washer-dryer, it is smaller than a standard U.S. washer. drum should not be overloaded. With too many clothes, airflow is reduced, increasing drying time. The drum should be filled to a maximum 2/3rd full.

3. OVER DRYING: The condensing dryer uses cold water is used to condense the moisture from the hot air. Since there is no external exhaust system, the moisture remains in the machine. Frequently, when it seems the clothes are damp, it is actually the remaining moisture (like dew). Take clothes out and within a few minutes they will be dry. Do not over dry the clothes. The exhaust system uses air-dry.

4. USE HIGH EFFICIENCY (HE) DETERGENT: By using High Efficiency (HE) detergent, you are preventing suds from entering the condensing chamber. When suds enter the condensing chamber, the particles can clog up the chamber and the fan blower. Over time, this reduces drying efficiency and may require the fan blower (impeller) to be cleaned. For this and all other front -loading/horizontal-axis units, High Efficiency (HE) detergents go a long way to improve the efficiency of the units.

5. SORTING: When sorting laundryalways take into consideration the quantity and type of fabric contained in the load. Highly absorbent fabrics such as those used in towels or jeans will absorb more water and become very heavy when saturated. If you notice that your clothes are taking longer than usual to dry you may be overloading the machine, or washing too many highly absorbent articles for a single load.

DIAGRAM OF THE FULLY AUTOMATIC WASHER

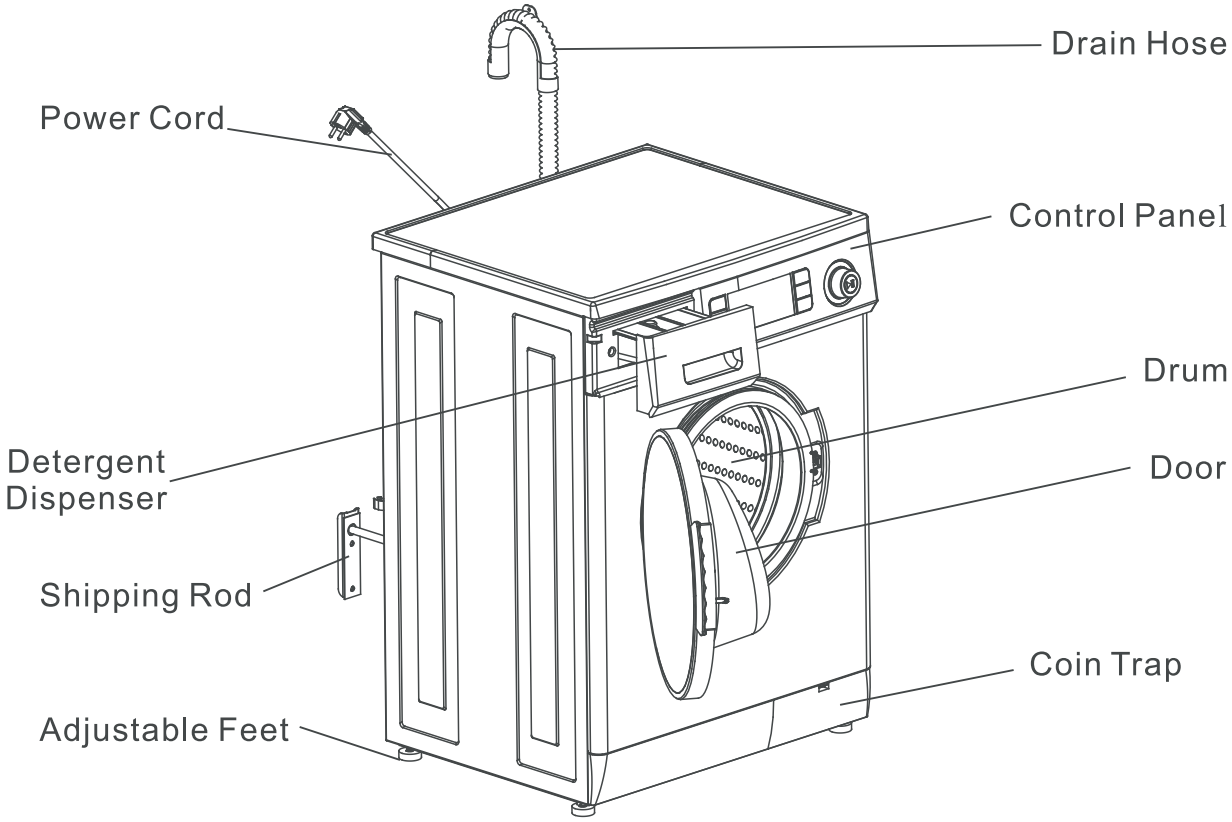

Factory-supplied Parts

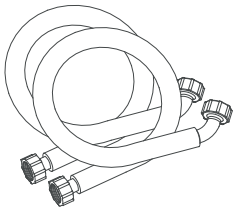

Inlet hose (2)

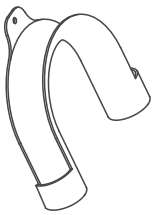

U-Connector for Drain hose

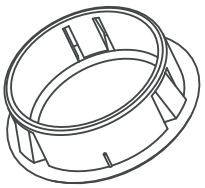

Cap for shipping rod hole (2)

PRE-INSTALLATION

1. The unit must be installed on a strong level floor, and in protected, dry, and well-ventilated area close to a power and water supply of sufficient capacity, and the correct outlet.
2. Installation on Carpet or Wood increases vibrations.
   - Carpets – place on light carpet only.
   - Wood – brace floor with screws and/or place additional sheets of plywood before installation.
3. This unit's installation and grounding should be done in accordance with local codes by a qualified installer. "Installation Instructions" are included in this manual for the Installer's reference.
4. The unit should be plugged into a properly grounded three (3) prong electrical outlet of 110V/60Hz with minimum 15 Amps, It should not be controlled by a wall switch or pull cord which might be turned off accidentally.

INSTALLATION INSTRUCTIONS

Handling

Please handle the machine carefully and use appropriate means while lifting and moving the machine so that it does not get damaged.Do not drag the machine to avoid damage to your flooring and also to the machine. Do not hold on to protruding parts when lifting.

Disposing of the packaging

The shipping package has protected your new washing machine on its way to your home. All packaging materials are non-polluting and recyclable. Please contribute to a better environment by disposing of packaging materials in an environmentally conscious manner.

⚠ DANGER ⚠

Keep children away from shipping carton and packaging components. Danger of suffocation from plastic foil and folding cartons.

Disposing of your old appliance

Old appliances are not worthless trash! Valuable raw materials can be recycled from old appliances.

To prevent children from locking themselves in the appliance, disable the door lock or remove the door.

Factory-supplied equipment

Inside the drum there is a packet of accessory parts supplied with your washer. Check that all the accessory parts supplied for your model are there. If any parts are missing contact your dealer.

Any residual moisture inside the drum is due to the final testing which every washing machine undergoes before leaving the factory.

Installation area

⚠ DANGER ⚠

Appliance stability is very important otherwise the washing machine could "wander" during the spin cycles.

The installation area must be solid and even. Soft floor surfaces, such as carpets or surfaces with foam backing, are not suitable.

⚠ DANGER ⚠

Do not install the washing machine outdoors or in an area exposed to freezing conditions. Frozen hoses can tear/burst.

If the washing machine is located in a room which will be exposed to temperatures below freezing point, or if it is located in a cabin that is being shut down for the winter, any residual water in the pump or water inlet hoses must be drained.

UNPACKING, LEVELING & POSITIONING

Removing the shipping rods

Caution: The shipping rods must be removed before using the appliance for the first time and must be retained for any future transport(e.g. when moving).

Remove the packing and check that the Washer is undamaged. If you have any doubt, do not use the Washer and call Customer Service. Keep all packing parts (plastic bag, foam rubber, screws, etc.) out of the reach of children since they could be dangerous.

Important: The inside of the Washer consists of a free floating drum that is affixed with shipping rods at the back of the cabinet (Fig.1) during transport. Before starting the machine, remember to remove the shipping rods (Fig.2). Close the holes left open by the rods with the plastic caps provided (Fig. 3).

It is important for the machine to be perfectly level. For this reason, the machine is fitted with adjustable feet used for leveling the machine before use (Fig.4).

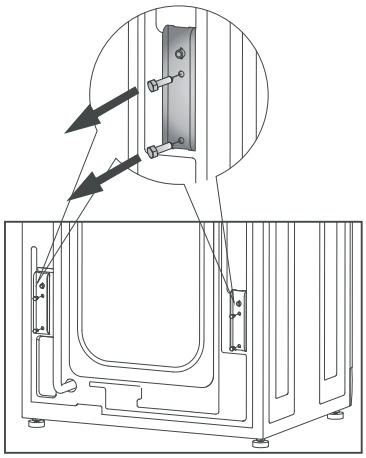

Fig.1

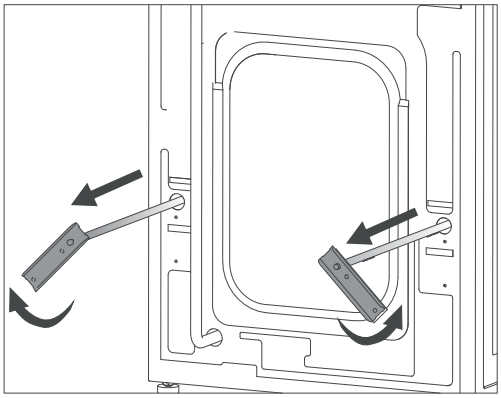

Fig.2

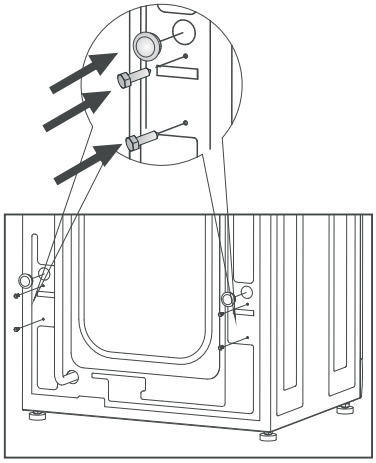

Fig.3

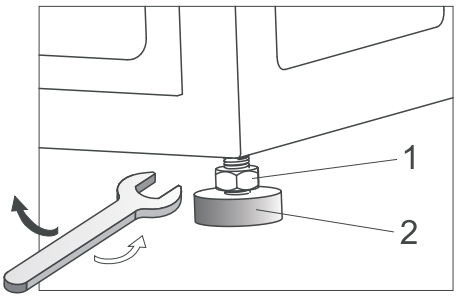

Fig.4

ELECTRICAL

CONNECTION

Connect the plug to a power outlet – 110V/60Hz with minimum 15 Amps. Make sure that the voltage and frequency available correspond with those stated on the serial number plate located on the machine. Do not use adaptors or extension cords since they could result in overheating and burn out.

POWER SUPPLY

CAUTION: NEVER USE AN EXTENSION CORD WITH THIS APPLIANCE.

This Washer must be connected to an individual circuit identical to the one specified on the rating plate of the loading port protected by fuses or circuit breaker conforming to local codes. **THIS APPLIANCE MUST BE PROPERLY GROUNDED.**

GROUNDING

This appliance must be grounded. In the event of malfunction or breakdown, grounding will reduce the risk of electric shock by providing a path of least resistance for electric current. This appliance is equipped with a power cord having an equipment-grounding conductor and a grounding plug. The plug must be plugged into an appropriate outlet that is properly installed and grounded in accordance with all local codes and ordinances.

WARNINGS

- Improper connection of the equipment-grounding conductor can result in a risk of electric shock. Check with a qualified or service representative or personnel if you are in doubt as to whether the appliance is properly grounded.
- Do not modify the plug provided with the appliance: if it will not fit the outlet, have a proper outlet installed by a qualified electrician.

Note: If the electrical power supply does not meet the specifications listed above, please call a licensed electrician.

PLUMBING

CONNECTING TO THE WATER FAUCET

Please read the following steps carefully
1. Connect the straight end of the hot-water hose to the hot-water faucet (Fig.5)
2. Connect the straight end of the cold-water hose to the cold-water faucet (Fig.5)
3. Connect the L-shaped end of the hot-water hose to the inlet valve marked “H” (Fig.6)
4. Connect the L-shaped end of cold-water hose to the inlet valve marked “C” (Fig.6).

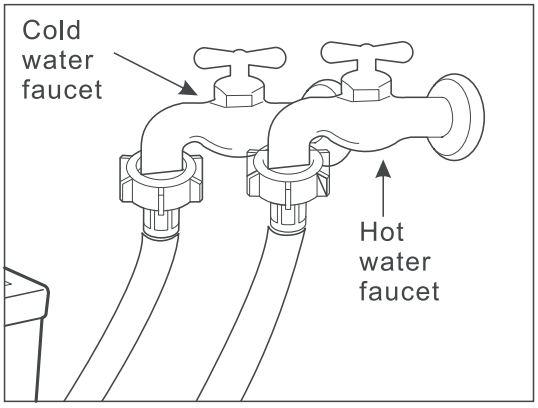

(Fig.5)

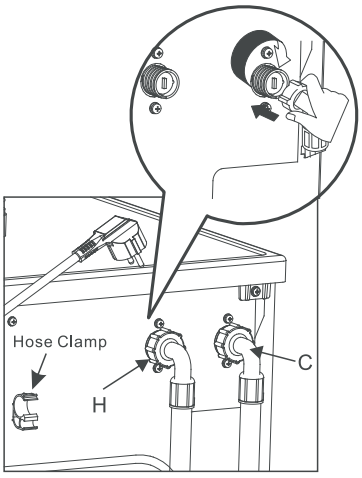

(Fig.6)

CONNECTING THE DRAIN HOSE

Connect the drain hose to a drain duct (with internal diameter of at least 1.6 inches) or place it for drainage in to a sink or a tub, ensuring that there are no kinks or bends. The free end must be at a height of 24”-40” from the floor. The hosecan be held in place using the white plastic clamp on the upper part of the back panel (Fig.6)

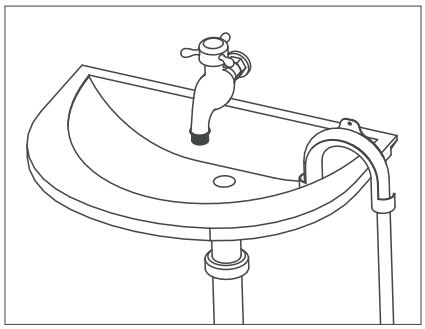

(Fig.7)

Height difference between the installation location of the washing machine and the drainage point:
Minimum 24”, and Maximum 40”.

- Attach water drain hose to U-Connector.
- Hook the U-Connector over the side or stand pipe (Fig 7.)
- When the water is being drained, check that the water flow out of the hose is adequate.

PROGRAM SELECTION CHART

Program	Description of load	Features	Suggested Washing times
– Heavy	Thick cottons (towels, jeans)	Hot water wash 1000 rpm spin	60 minutes
– Towels	Mixed cottons (t-shirts, jeans)	Hot water wash 1000 rpm spin	55 minutes
– NORMAL	Mixed cottons	1000 rpm spin Warm water wash	50 minutes
– Quick Wash	Cotton blends, light fabrics	Cold water wash 1000 rpm spin	40 minutes
– Kids	Cotton blends, light fabrics	Warm water wash 500 rpm spin	40 minutes
– Delicate	Silks	Cold water wash 500 rpm spin	40 minutes
– Wool	Woolens	Cold water wash 500 rpm spin	40 minutes

USEFUL TIPS

Denim Alert:

Some overalls have straps with hooks that can damage the drum of your washing machine or other garments during the wash. To minimize the risk, place hooks in the pocket and fasten with safety pins.

Vacations: unplug the appliance:

It is recommended that you should unplug the machine from the socket and turn off the water supply. Leave the door ajar to allow air circulation to the draw and the door gasket area. This will prevent unpleasant odors.

OPERATING INSTRUCTIONS

1. Make sure the Washer is turned off. (Power Indicator light should be off).
2. Separate clothes by type, color and degree of soiling.
3. Load clothes of the selected type loosely into the drum.
4. Close the Washer. You will hear a click when it is correctly closed.
5. Add detergent to Dispenser A. Use High Efficiency (HE) detergent about 1 table spoon. If desired, you can add about 1 tablespoon. If desired, you can add pre - wash detergent and fabric softener as shownin the diagram to Dispenser B and C.

Detergent Dispenser

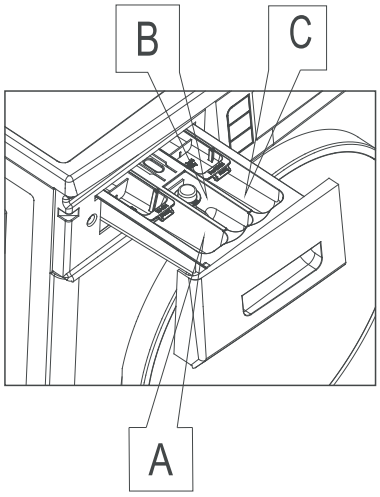

Dispenser A:
Detergent for main wash

Dispenser B
Fabric softener

Dispenser C
Detergent for pre-wash.

Dispensers A and C, for wash and pre-wash detergents, have blue compartments within them. These compartments are only for liquid detergents. Please do not put powder detergents in them. Powder detergents should be placed directly in the dispensers. Please leave the blue compartments in place.

Note: Concentrated fabric softener must be diluted with a little water before being poured into the dispenser (prevents the overflow from becoming blocked).

Please don't add detergent in Dispenser C, if the Pre-wash cycle has not been selected.

Control Panel

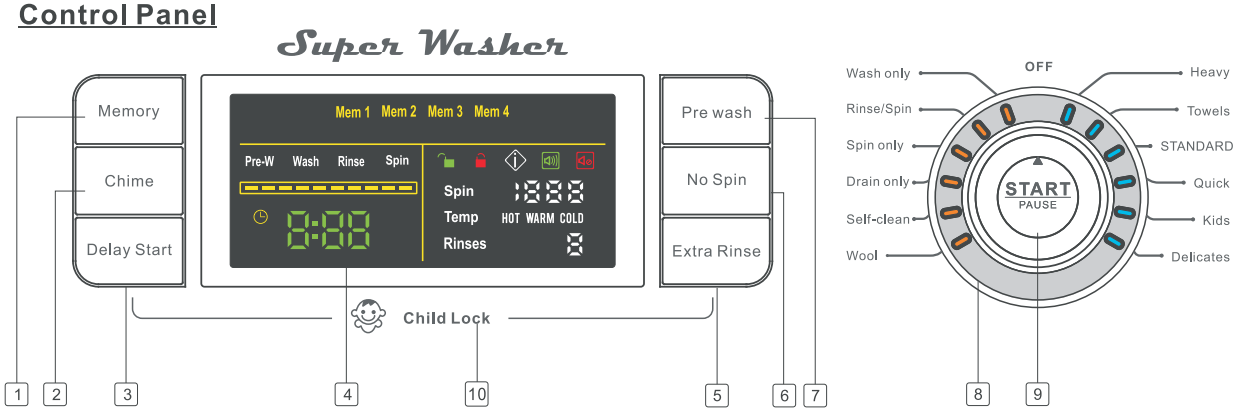

1	Memory button	Press this button to select one of the four memory positions, then select the options for your favorite washing cycles, then press this button for three seconds to memorize. If you want to run the memorized program later, press this button to select one of them, then press Start/Pause button.
2	Chime button	Press this button to turn on, or turn off the chime before you start the washing cycle.
3	Delay Start button	Press this button to select the delay time options from 1 to 24 hours in one hour increments. If a change is to be made after the delay start time is set, turn the dial to “OFF” position, select the desired program again.
4	Graphic Display	Displays the selected program and its condition, such as the temperature, spin speed, remaining time, rinse times, water level, and error messages.
5	Extra Rinse button	Press this selection button to add one more rinse cycle to the selected washing program.
6	No Spin button	Press this selection button to eliminate the spin function. This function will keep the laundry in the rinse water after the last rinse cycle is finished. Press this button again, it will drain out the water and proceed to last spin cycle.
7	Pre Wash button	Press this button to add a prewash cycle to the selected washing program. This cycle is helpful to clean heavy soiled clothes.
8	Program Dial	Turn this dial to power on/off, and select one of the 12 available programs depending on the laundry
9	Start/Pause button	Press this button to start or interrupt the selected washing program, or turn the display on.

10 Child Lock	Press these two buttons for 5 seconds during the program is running, then all the buttons and knob will be locked to prevent the child from playing with the unit. Press these two buttons again, all the buttons and knob will be unlocked.

Add-a-sock Feature

The wash program can be stopped at any time to add forgotten items to the laundry.

Press PAUSE for 5 seconds

- Door will open after draining water so that it does not overflow.
- Load clothes. Close door.
- Press start. Washer will continue from the point it stopped.

The indicator light and the display will show the selected program.

Pressing the start button (START) will lock the door and 🔒→🔓 The wash cycle will start, until the whole program is completed. The door will be locked and cannot be opened until 2 minutes after the wash cycle ends. Please do not try to force the door open. **Breaking the door handle is not covered by warranty.**

UNDERSTANDING FABRIC CARE LABELS

The symbols on labels of your garments will help you in choosing the suitable wash program, the right temperature, wash cycles, and ironing methods. Please review the chart below.

Machine Wash Cycle	Normal/ Cotton Heavy Duty	Permanent Press/ wrinkle resistant	Delicate/ Gentle	Hand wash	Do not wash	Do not wring
Water Temp.	●●● Hot (50°C/120°F)	●● Warm (40°C/105°F)	● Cold/Cool (30°C/85°F)			
Tumble Dry	Dry	Normal/ Cotton Heavy Duty	Permt Press/ wrinkle resistant	Delicate/ Gentle	Do not tumble dry	Do not dry
Special Instructions	Line dry/ Hang to dry	Drip dry	Dry flat	In the shade		
Bleach Symbols	Bleach	No-chlorine bleach	Do not bleach			

WINTERIZING YOUR WASHER

To winterize your Washer please, follow the instructions below to avoid damage to your unit due to freezing:

1. With the unit off, remove coin trap. This will allow the water remaining in the pump and drain hose to be evacuated. Replace coin trap.

2. Close the water faucets and disconnect the inlet hoses. There should be no water in the hoses where they attach at the back of the machine.

IF ANTIFREEZE IS BEING USED IN THE SYSTEM FOLLOW THESE INSTRUCTIONS:
(not necessary if the above drain procedure is followed)

1. When putting antifreeze into the water system of your coach, set the washer to the NORMAL wash setting and allow water to flow into unit until antifreeze is detected.

2. Turn off Power. Set the washer knob to the "**Rinse**" position and allow water to flow for 10 seconds.

3. Turn off Power. Set the washer knob on "Spin" to remove the majority of the water from the unit.

4. Turn off Power. With the unit off, remove coin trap from the unit. This will allow the water remaining in the pump and drain hose to be evacuated. Replace coin trap.

5. If you elect you may close the inlet shut-off valves (provided by installer) and disconnect the inlet hoses.

6. Any water remaining in the unit should contain antifreeze and be protected from freezing.

Note: When placing unit into service allow unit to operate for one complete cycle before doing laundry to ensure all antifreeze has been purged from the unit.

If you have any further questions pertaining to this matter please contact **Technical Support.**

MAINTENANCE

Your Washer has been designed to operate with easy maintenance.

Follow these simple maintenance procedures to obtain optimum performance:

1. Ensure that your machine was installed according to the correct installation procedures detailed in this Manual.
2. Do not use solvents either to clean the machine or to wash clothes.
3. Keep the inside of the detergent dispenser clean
4. The drain pump of this Washer is a self-cleaning pump. It is therefore not necessary to carry out cleaning and maintenance operations. However, objects (such as buttons, coins, etc) may sometimes accidentally drop into the pump. Since there can't be expelled through the drain hose, please remove the cover panel at the bottom of the unit by holding down on the small tab and pulling the cover down (Fig. 11), remove the pump cover, and carefully inspect the inside. (Fig. 12). Be sure to close the cover after cleaning. The lab should be gently pulled up until you hear a click.

Cleaning the coin trap

- Switch off the washing machine.
- Open the service flap. (bottom right corner)(Fig. 11)
- Carefully unscrew the coin-trap cover. A little residual water will flow out.(Fig. 12)
- Remove foreign objects/fluff from inside and clean the interior. (Fig. 13)
- The pump impeller wheel located behind the water filter, must be able to rotate. Remove detergent residue and fluff from the pump cover thread and pump housing.
- Insert the coin-trap cover and screw tight.
- Insert and close the service flap.

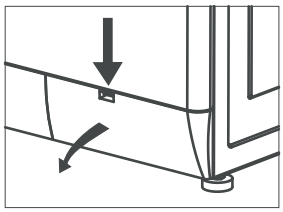

(Fig.11)

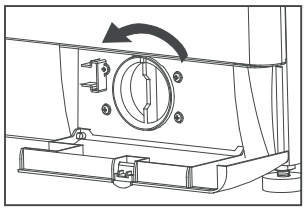

(Fig.12)

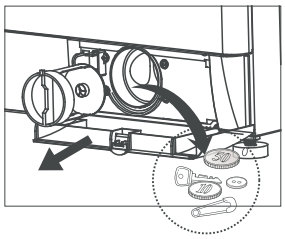

(Fig.13)

Cleaning the Detergent drawer and Recess

- Press the release lever on the inside of the drawer and pull it out.(Fig. 14)
- Remove the cap from the Fabric Softener compartment.
- Wash all of the parts under running water.
- Clean the drawer recess with an old toothbrush.(Fig.15, Fig. 16)
- Reinsert the cap (Pushing it firmly into place).
- Push the drawer back into place.
- Run a rinse program without any laundry in the drum.

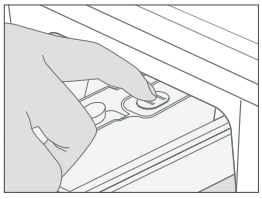

(Fig.14)

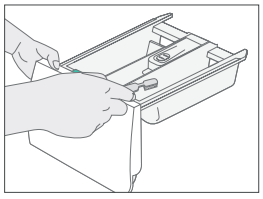

(Fig.15)

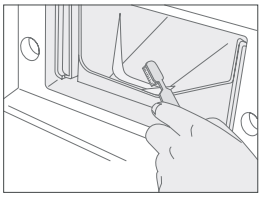

(Fig.16)

STAIN REMOVAL CHART

Blood

Rinse or soak fresh stain in cold water. Work detergent into any remaining stain. Rinse. If stain persists, put a few drops of ammonia on stain and repeat detergent treatment. Rinse. If necessary bleach.

Burn Marks

Rinse or soak in cold water. Work detergent into stain. Rinse. Bleach, if necessary. Stain may be impossible to remove

Candle Wax

Scrape off excess. Place stain between clean white blotters or several layers of facial tissues. Press with warm iron. Sponge with cleaning fluid. If dye spot remains, bleach.

Chewing Gum

Rub with ice to harden. Scrape off excess with dull blade. Sponge with cleaning fluid.

Chocolate or Cocoa

Soak 15 minutes in cold water. Rub detergent paste into stain, then rinse thoroughly. Launder in hottest water safe for fabric. If colored stain remains, sponge with hydrogen peroxide, rinse and launder.

Coffee or Tea

Soak fresh stains immediately in cold water. Then use bleach treatment with hottest water safe for fabric.

Cosmetics: eye shadow, lipstick, liquid make-up, mascara, powder, pancake make-up or rouge

Apply undiluted liquid detergent to stain, or dampen stain and rub in soap or detergent paste until thick suds are formed. Work in until stain is gone, rinse well. Repeat if necessary. If color remains, bleach if safe for fabrics.

Cream, Ice Cream or Milk

Sponge stain with cool water or soak stain in cool water for 30 minutes or longer. If stain remains, work detergent on spot then rinse. Bleach if necessary.

Deodorants and Antiperspirants

Wash or sponge stain thoroughly with warm water and detergent; rinse. If stain remains, bleach with hot sudsy water. Launder. You may be able to restore fabric color by sponging with ammonia. Rinse thoroughly.

Dye

Rinse or soak in cold water. Work detergent into stain. Rinse. If necessary, bleach. Stain is not always possible to remove. A commercial color remover may also be used.

Egg or Meat Juice

Rinse in cold water. If stain remains, sprinkle with meat tenderizer, let stand 15-20 minutes. If stain still remains, sponge with cleaning fluid or diluted bleach. Launder in hot water. The use of hot water first may set stain.

Fabric Softener Stain

Rub with bar soap until stain has lightened. Rinse thoroughly. Launder. Rubbing alcohol is sometimes effective in the color of the garment can take it. Launder. If desired, dry cleaning can be used.

Felt tip pen

Spray spot with cleaners suitable to this purpose. Sponge stain thoroughly. Rinse with cold water. Reapply cleaner if necessary .

Fruit, Wine

Soak fresh stains immediately with cool water. Then use bleach treatment with hottest water safe for fabrics. Launder.

Grass

Work detergent into stain. Sponge with denatured alcohol. Bleach, if necessary.

Grease or Oil

Scrape away excess. Rub detergent paste or a general purpose liquid household cleaner into stain, rinse with hot water. If stain remains, sponge thoroughly with a grease solvent. Dry. Repeat if necessary. To rem ove yellow stain, use a chlorine or oxygen bleach.

Ink

Some ball-point inks are set by water. First test a scrap of cloth. Sponge stain repeatedly with acetone, amyl acetate or rubbing alcohol. Hair spray is effective. Launder. Bleach if necessary. Use amyl acetate on triacetate, arnel, dynel and verel. Use acetone on other fabrics. NOTE: Some inks cannot be removed.

Ketchup

Scrape of excess. Soak in cold water 30 minutes. Pre-treat with a detergent paste. Launder.

Mildew

Brush off surface growth to keep mold spores from spreading. Dip article into solution of ½ cup bleach per 1 gallon of cool sudsy water for 5 to 10 minutes. Rinse well. Launder.

Mud

Let stain dry; then brush well. Rinse repeatedly in cool water until mud comes out. Launder. (Hot soaps suds set a red or yellow clay stain).

Mustard

Soak in hot detergent water for several hours. If stain remains, bleach.

Nail Polish

Treat while fresh, scraping or wiping off as much as possible, before it dries. Place stain face down on white paper towels. Sponge back of stain acetone (nail polish remover) or sponge with denatured alcohol and a few drops of household ammonia. Sponge stain

frequently. Launder with water at temperature suitable for fabric. *Do not use acetone on acetate, arnel, dynel or rayon*.

Paint

Sponge or soak in turpentine or solvent recommended as a thinner on label. Launder.

Perfume

Rinse in cold water. Rub undiluted liquid detergent or a detergent paste into stain. Rinse. If stain remains, bleach.

Perspiration

Wash or sponge stain thoroughly with warm water and detergent paste. If perspiration has changed the color of the fabric, restore it by treating with ammonia or vinegar. Apply ammonia to fresh stains; rinse with water. Apply vinegar to old stains; rinse with water.

Rust and Iron

Apply commerical rust remover, Rinse. Or, if safe for fabric, boil stained article in solution of 4 teaspoons of cream of tartar to 1 pint water.

Shoe Polish

Scrape off as much as possible. Pre-treat with a detergent paste; rinse. If stain persists, sponge with rubbing alcohol (1 part to 2 parts water) or turpentine. Remove turpentine by sponging again with warm detergent solution or with alcohol. Bleach if necessary.

Soft Drinks

Sponge with cold water, some stains are invisible when they have dried, but turn brown when heated and may be impossible to remove.

Tar and Asphalt

Act quickly before stain is dry. Sponge with grease solvent or turpentine. Launder.

Urine

Soak in cool water. If stain is dry, work a detergent paste into the spot then rinse. If necessary, bleach.

TROUBLESHOOTING

In most cases, when your washer fails to work, the problems arising can be easily solved without having to call for a technician. Before calling for assistance, always check these points.

The washer fails to start
Is the plug correctly inserted into the socket?
Is there electricity in the house?
Is the door closed properly?
Is the start button pressed?
Is the Washer knob in the correct position for the cycle to start?
Is the water supply turned on?

The washer fails to fill with water
Is the hose correctly connected to the faucet?
Is there water supply?
Is there sufficient water pressure?
Is the faucet filter clean?
Is the inlet hose kinked?

The washer continuously fills and drains water
Is the drain hose positioned too low?
Check that the inlet hose is not connected at a height more than 40 inches above the floor.
Is the end of the outlet hose immersed in water?

The washer does not drain or spin
Does the selected program incorporate water draining?
Is the drain pump clogged?
Is the drain hose kinked?

There are too many suds in the drum
Is High Efficiency (HE) detergent being used? It is recommended to use HE detergent.
Is the correct amount of detergent being used?

The washer vibrates too much during the spin cycle
Have all shipping rods been removed during installation?
Has the machine been leveled correctly?
Is there space between the machine and adjacent units?
Is the machine loaded evenly?
Is the machine installed on carpet or on a wooden floor?

The washer leaks
Is the metal ring of the inlet hose properly attached?
Is the detergent dispenser obstructed?
Is the drain hose inserted correctly into the drain?

DIAGNOSTIC MENU		
Code	**Description**	**Component**
E1	Door close	Door Switch
E2	Drain	Drain Pump
E3	Water inlet	Inlet Valves
E4	Water overfill	Pressure Switch
E5	Motor	Thermal Protector +Electronic Module
E6	Communication between display & electronic module	Communication Cable
E10	Water overfill	Water level sensor